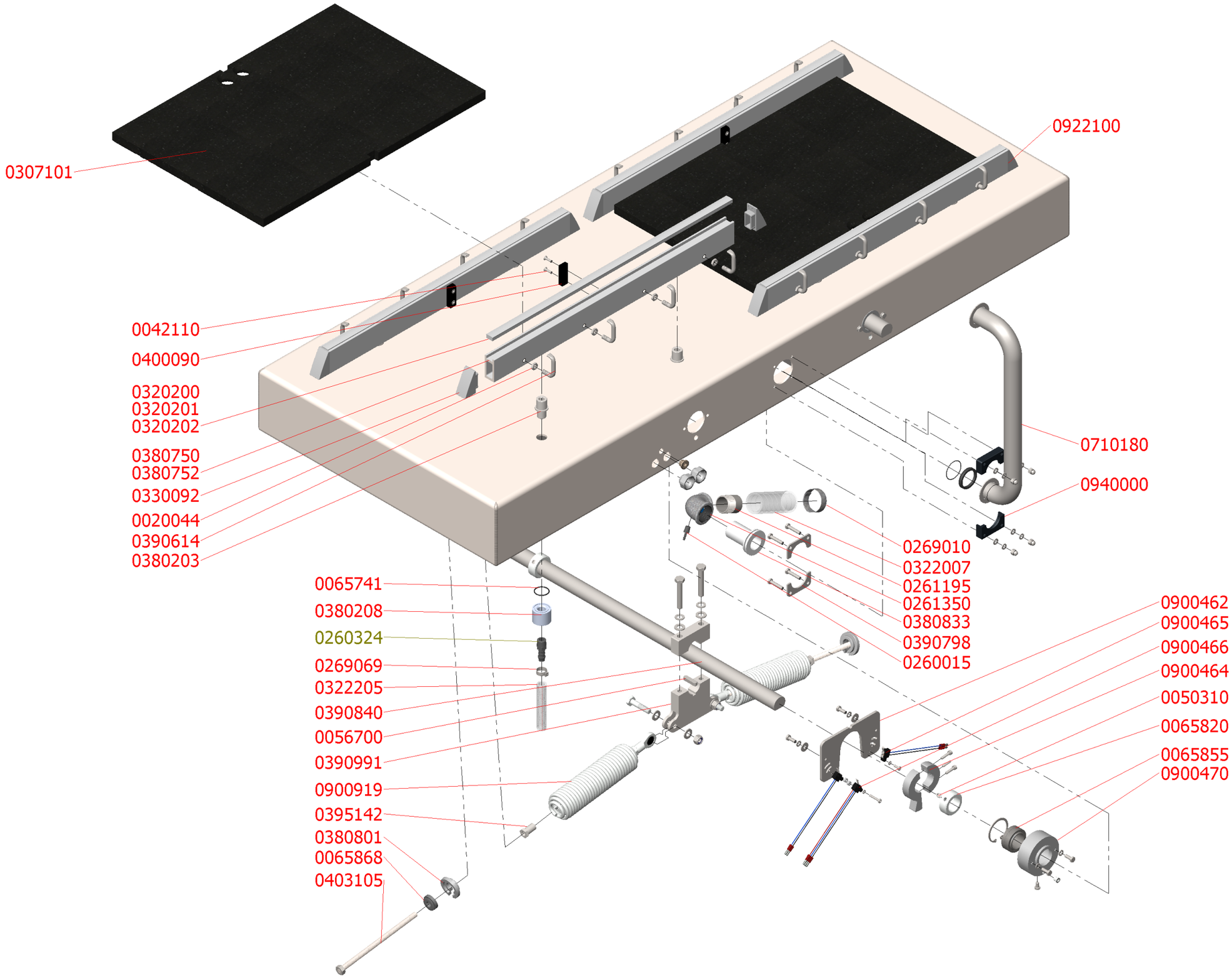

M.K.A.A. 22-5-2023 X0284-A

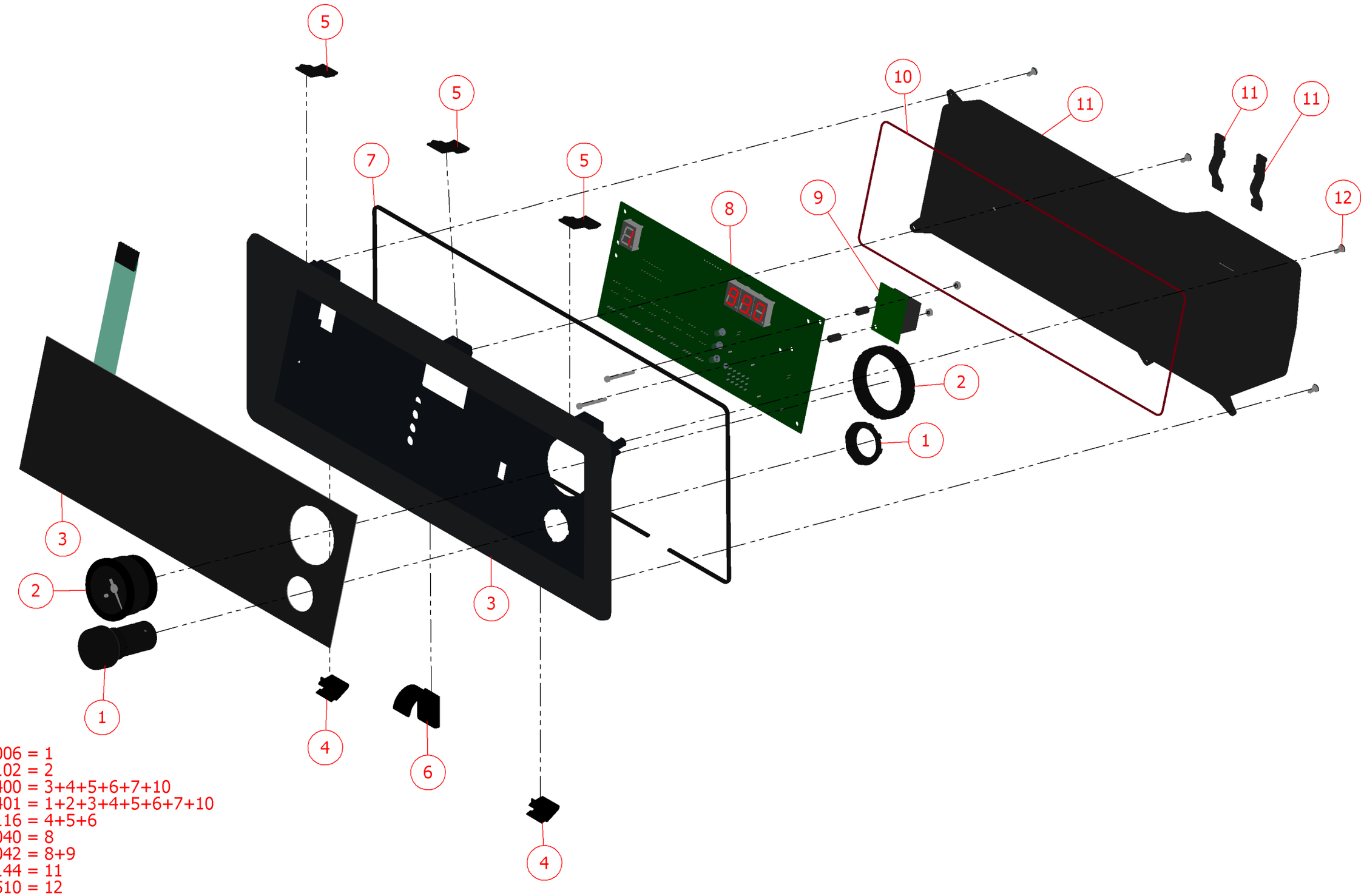

0220006 = 1
0810102 = 2
8000400 = 3+4+5+6+7+10
8000401 = 1+2+3+4+5+6+7+10
0330116 = 4+5+6
0230040 = 8
0230042 = 8+9
0330144 = 11
0050510 = 12

B.v.d.W. 31-8-2020 X0175-A

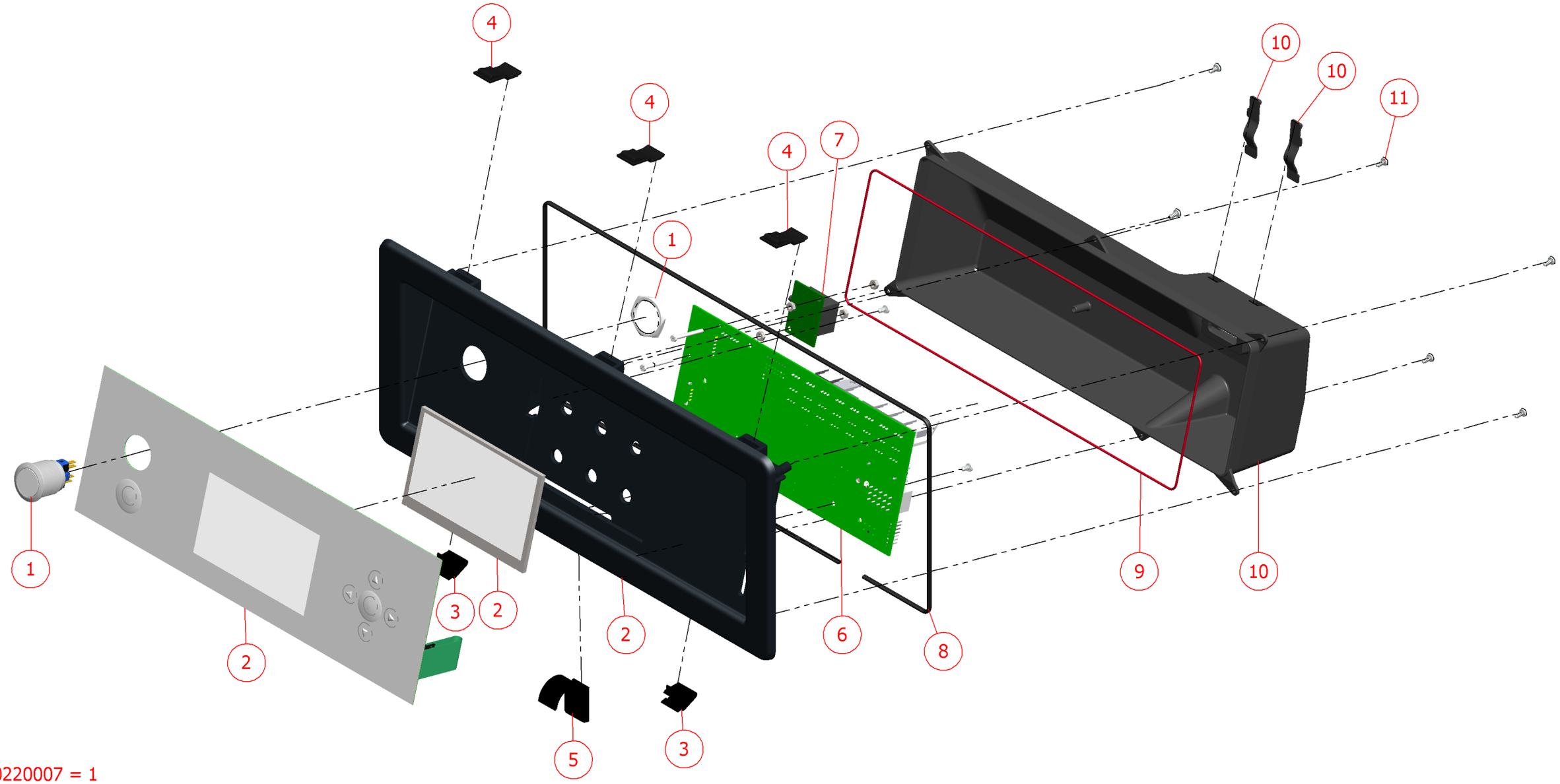

0220007 = 1
8000712 = 1+2+3+4+5+6+7+8+9+10+11
0900055 = 1+2+3+4+5+6+8+9+10+11
0330116 = 3+4+5
0330144 = 10
0050510 = 11

B.v.d.W. 31-8-2020 X0094-A

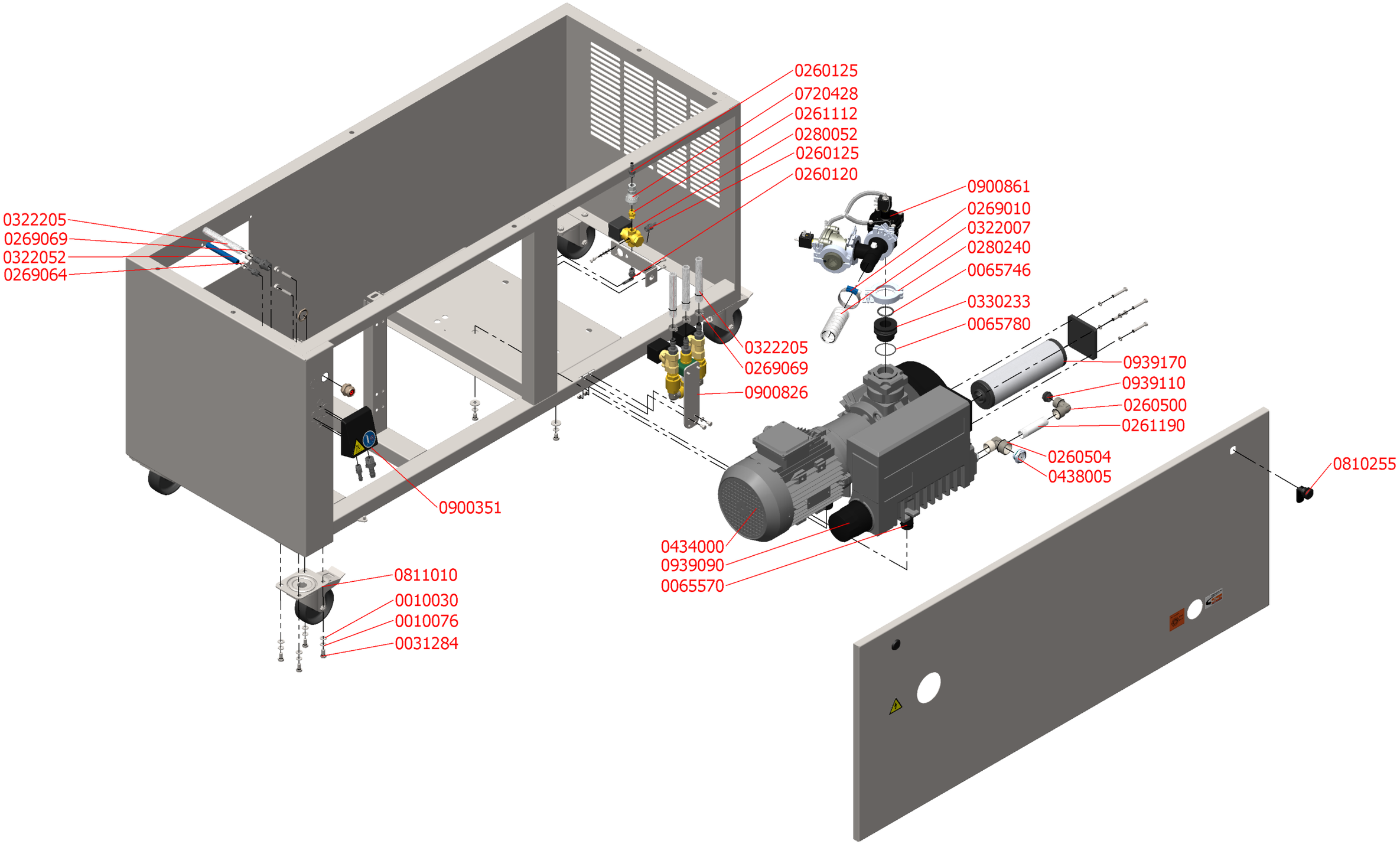

K.N. 9-12-2019 X0283-0

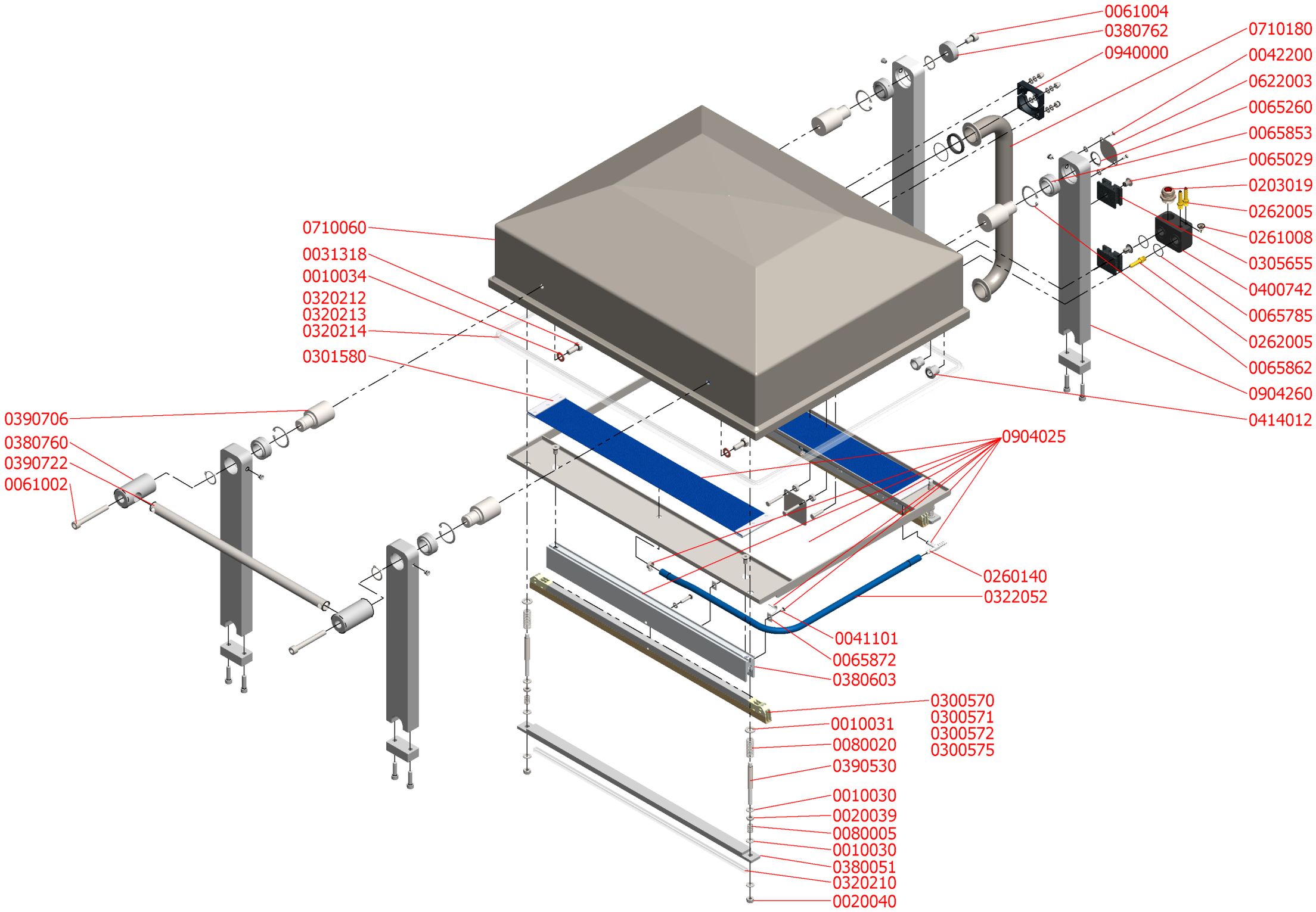

K.N. 9-12-2019 X0285-0

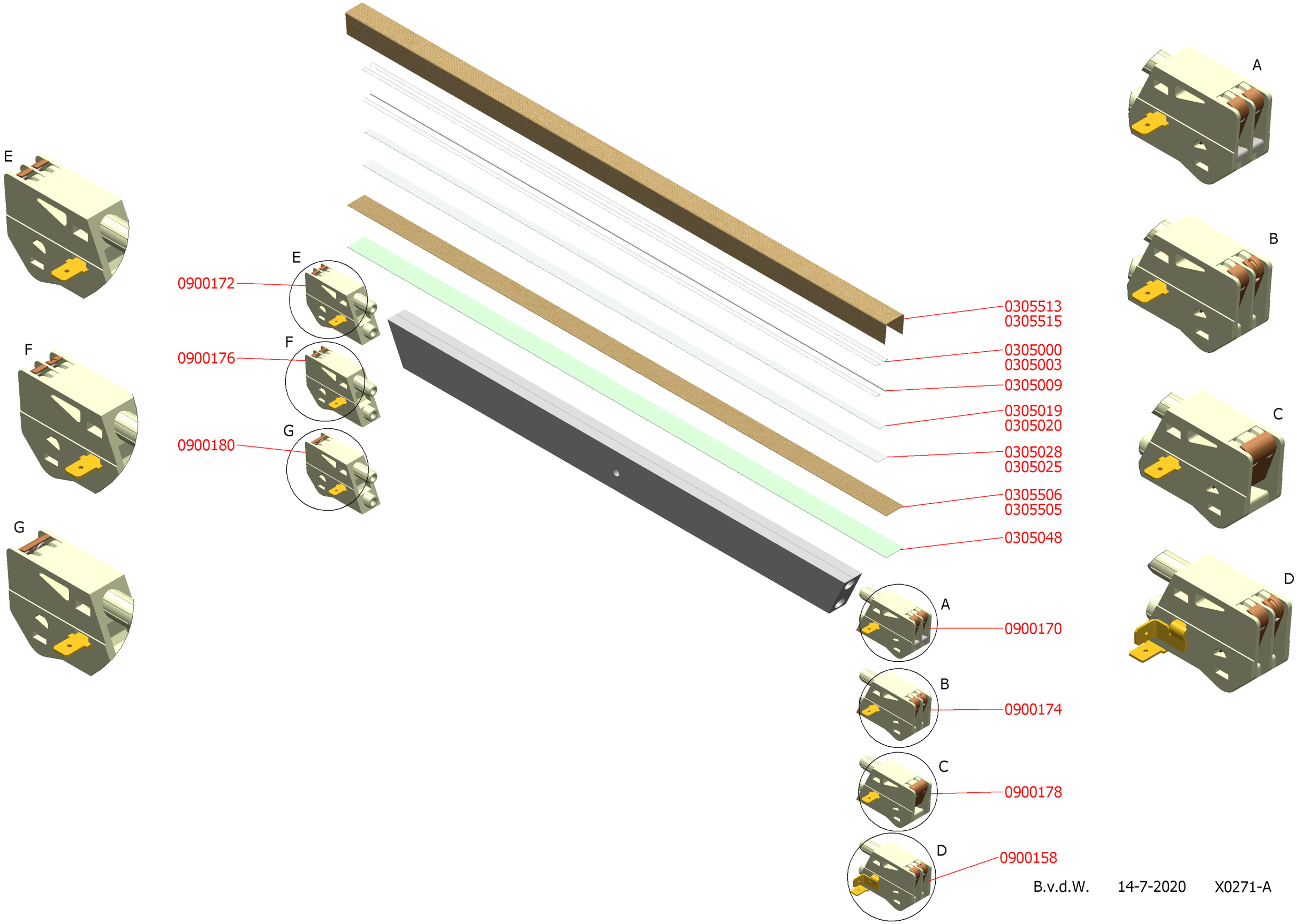

B.v.d.W. 14-7-2020 X0271-A

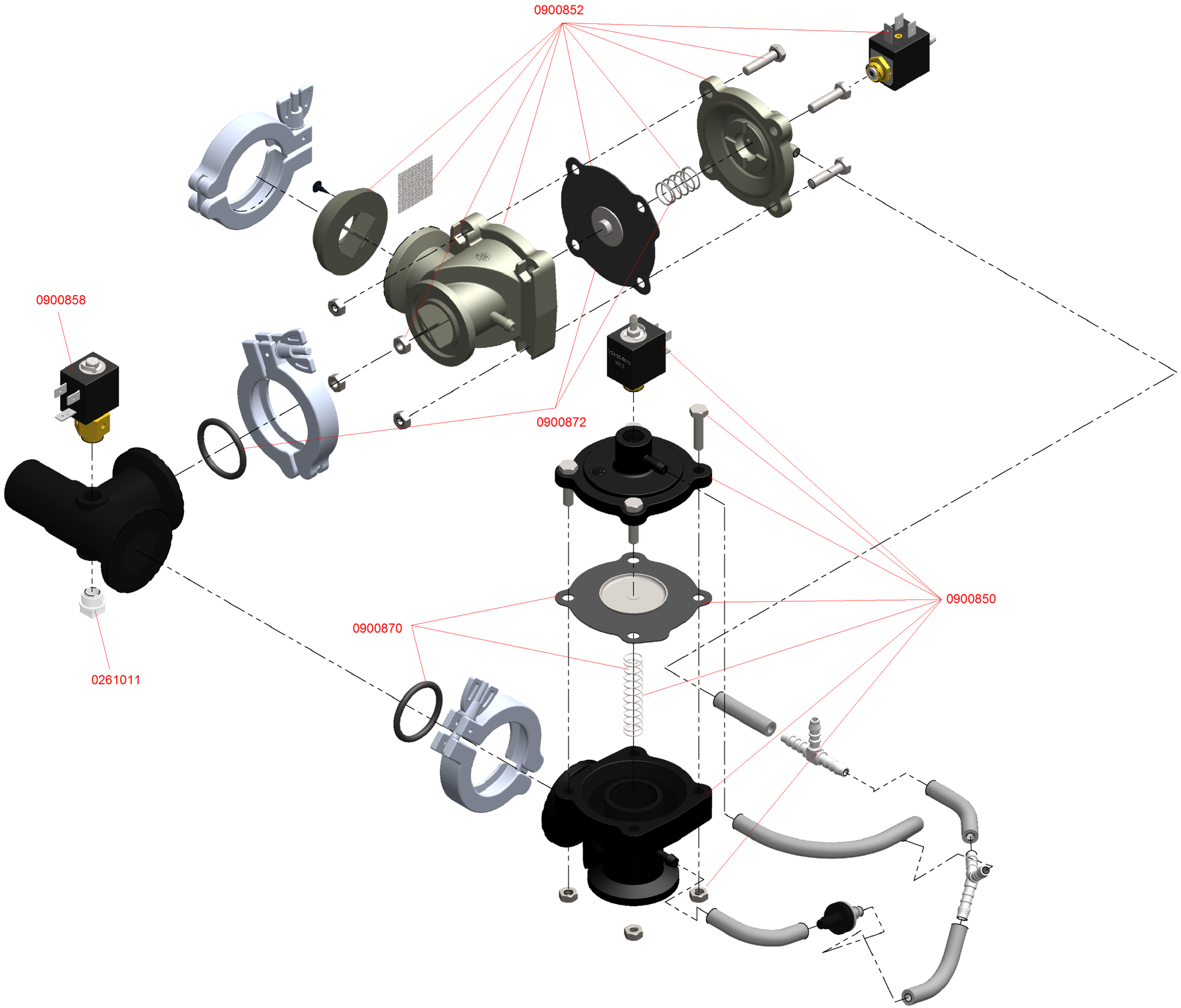

X0102-0